HBYB2001D
Pressure Transmitter

1.Product Introduction

1.1 Working Principle

The HBYB2001D digital display pressure transmitter from Wuxi Haobang High-Tech Co., Ltd. utilizes a pressure core made with MEMS diffused silicon technology. It is amplified by a digital compensation amplifier circuit equipped with a microprocessor, and undergoes fully intelligent temperature compensation through digital software, outputting standard signals. The general-purpose product boasts an accuracy of 0.25%. During the standard purification production process, parameters are strictly controlled to avoid the impacts of temperature, humidity, and mechanical fatigue, ensuring the long-term stability of the transmitter in harsh industrial environments.

The digital circuit of the transmitter is carefully designed for working conditions such as radio frequency, electromagnetic interference, and surge voltage, with strong anti-interference ability, wide power supply range, and polarity protection.



1.2 Product Features

The HBYB2001D digital display pressure transmitter possesses the following characteristics: high sensitivity (18-25mv/V), high reliability, low thermal zero drift, low thermal sensitivity drift; compact size.

- Dynamic response frequency of 1KHz, meeting the requirements of dynamic pressure measurement, such as special occasions such as waves and wind tunnels;
- Strong output signal, high sensitivity (18-25mv/V), easy for secondary instruments to eliminate interference signals and normalize processing;
- Four-digit display, with on-site zero and full adjustment;
- Multiple unit options (KPa, MPa, Bar, mA);

2.Product Description

The HBYB2001D digital display pressure transmitter, with its parameters strictly controlled during the standard purification production process, has undergone rigorous testing and aging screening for components, semi-finished products, and finished goods, ensuring stable and reliable performance. As a low-cost, cost-effective product for civilian and industrial use, it is widely applied in pressure measurement in industrial process sites such as petroleum, chemical, metallurgical, electric power, and hydrological industries.

3.Range Selection

Table1: Product Range Selection Table

Range	Core type	Method	Remark
-100KPa~60MPa	Oil-filled core	Gauge Pressure, Absolute Pressure	
1MPa~100MPa	Micro-melting core	Gauge Pressure	

4.Performance Parameters

Table 2: Product Performance Parameter Table Power supply: 5Vdc or 9～30Vdc Reference temperature: 25℃

Parameters	Min	Typ.	Max	Units	Remark
Precision	-0.25		+0.25	%FS	Including nonlinearity, hysteresis, and repeatability
Long-term stability	-0.1		+0.1	%Span	1 year
Insulation resistance	50			MΩ	250Vdc
Overload pressure	2x			Rated	
Breaking pressure	3x			Rated	

Parameters	Min	Typ.	Max	Units	Remark
Pressure cycle	10			Million	From zero to full scale
Compensation temperature	-20		+85	℃	
Operating Temperature	-40		+85	℃	
Storage temperature	-40		+125	℃	
Vibration		±20		g	
Impact		100		g	11mS

Please note: For special needs, please contact us

5.External Dimensions

The appearance of the HBYB2001D digital display pressure transmitter is shown in Figure 1, and the product dimensions are shown in Figure 2. All dimensions are in millimeters (mm), and the unmarked tolerance is ±0.1mm.



Figure 1: Product appearance diagram

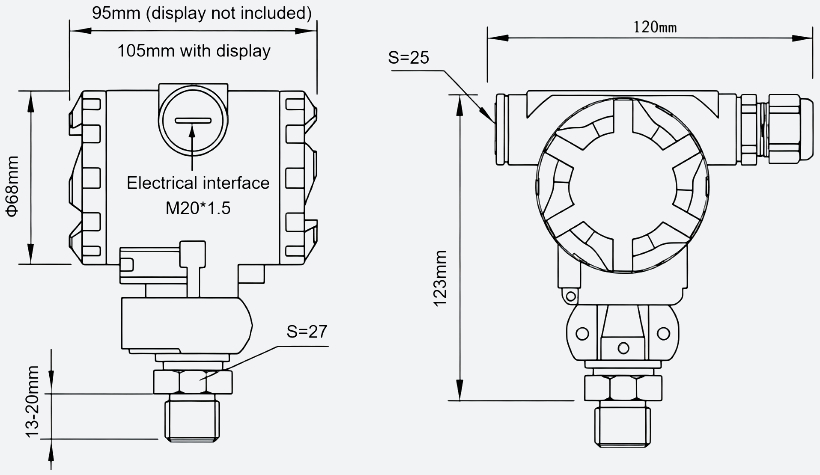

Figure 2: Product dimension drawing

6.Wiring Method And Output Options

Please refer to Figure 3 for the pin definition of the HBYB2001D digital display pressure transmitter, and Table 3 for the pin function description, the wiring method is as shown in Figure 4.



Figure 3: Pin definition diagram of HBYB2001D digital display pressure transmitter

Table 3: Pin function description

Output	Pin number	Definition	Function	Wiring
4-20mA	OUT+	I+	Positive current electrode	Red
	OUT-	I-	Negative current electrode	Blue

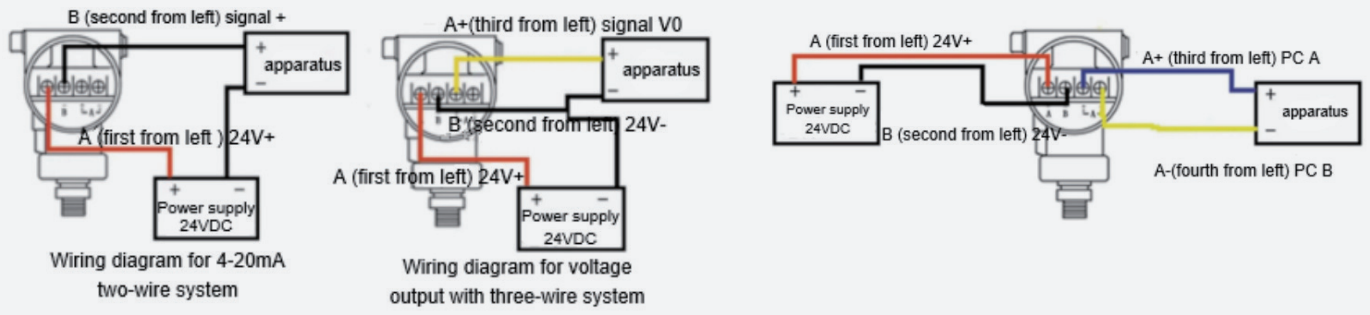

Figure 4: Wiring Method

Note: The actual color is subject to the actual product upon delivery. For special requirements, please contact the manufacturer.

7.Product Selection Information

The selection information for the HBYB2001D digital display pressure transmitter is shown in Table 4.

Table 4: Product Selection Guide Table

Product Name: HBYB2001D	
Output Type: A: Analog	
Core Type: /: Micro-melt core; C: Oil-filled core	
Range: W: -0.1MPa~100MPa, Fill in directly according to user requirements	
Supply: V2: 9~30Vdc	
Output Signal: B5: 2088 round meter head (4 digits) 4~20mA	
Interface Thread: C1: G1/2; C2: G1/4; C4: NPT1/2; C5: NPT1/4; C8: M20	
	Additional Information: **Precision:** P1: 0.5%; P2: 0.25%; P3: 0.1%; P4: 0.075% **Working Environment:** GW: high temperature(≤150℃); GB: flameproof; BA: intrinsically safe
Selection Example: HBYB-2001D-AC2MPaV2B5C1P2GB	
***Please note:** 1)Some products do not include all the ranges mentioned above. For more product information, please contact Haobang sales personnel. 2)Pressure conversion: 10kPa=0.01MPa=100hPa=100mBar≈75mmHg≈1020mmH2O≈1.45PSI	

8.Customized Services

Haobang is guided by customer needs and provides flexible customized solutions to meet their different needs. Provide effective customization services for pressure transmitters, including but not limited to different ranges, packaging sizes, and application ranges. For more information, please contact info@haobang-smt.com .

9.Version Revision Record

Table 5: Version Revision Record

Version	Description	Data
1.01	Initial release	2026.1.16

Important Notices and Supplementary Provisions

1. Scope of Application and Operating Conditions

The product's specific technical parameters, measuring range, output form, and physical dimensions are as defined in the HBYB2001D Pressure Transmitter Specification. Product performance is valid only within the rated operating conditions stated in the specification (supply voltage, temperature range, measured medium, maximum pressure, output load, ingress protection rating, etc.). Use beyond the rated range voids any assurance of performance, reliability, or service life; the user bears all resulting consequences.

The typical application industries listed in the specification (e.g., industrial process control, equipment manufacturing, environmental monitoring) are for reference only and do not constitute an express or implied warranty of fitness for any specific end-use system. Users must independently assess product suitability.

2. Performance Parameters and Disclaimers

Specification parameters are measured under the Company's standard test conditions. Where actual conditions deviate from these, some parameters may fall outside the stated limits; designs must incorporate adequate engineering margin.

The Company does not warrant the product's functional correctness, system compatibility, or long-term reliability in any specific application, including but not limited to: electromagnetic compatibility (EMC); chemical compatibility with specific media; structural integrity under mechanical stress; and compatibility with the user's safety-protection circuitry.

The Company does not warrant that use of the product does not infringe any third-party intellectual property rights. Users must assess related risks on their own.

3. Installation and Usage Precautions

ESD Protection: Operators must wear anti-static wrist straps or gloves, use grounded anti-static mats, ensure reliable equipment grounding, and employ anti-static packaging. Latent damage caused by non-compliance is not covered by warranty.

Soldering and Assembly: Soldering iron tip temperature ≤ 350°C; single-joint soldering time ≤ 3 s (refer to the HBYB2001D Pressure Transmitter Specification for details). Clean only after the device has cooled to room temperature; lead-free no-clean solder is recommended. Ultrasonic cleaning is prohibited.

Cleaning and Maintenance: Wipe the enclosure with a soft dry cloth or a cloth lightly dampened with mild detergent. Direct contact of the surface with strong acids, strong alkalis, or organic solvents is prohibited. Non-waterproof products must never be fully immersed in any liquid.

Installation: Tightening torque must not exceed the limit given in the specification. Electrical connections must satisfy the required ingress protection rating and be adequately waterproofed. A periodic recalibration program is recommended based on actual service conditions.

4. Warranty and Limitation of Liability

Within 12 months from the date of shipment, the Company will repair or replace, free of charge, any product that fails under normal operating conditions due to defects in material or workmanship.

Exclusions: use beyond specification limits; unauthorized disassembly, modification, or re-soldering; incorrect wiring, reverse polarity, or overvoltage/overcurrent input; damage from corrosive, abrasive, or crystallizing media; force majeure such as natural disasters, lightning, or fire; normal wear and aging beyond the warranty period; and products with missing or altered serial numbers or labels.

Warranty Procedure: Retain the failed unit and its operating records, contact info@haobang-smt.com, complete the Product Return/Repair Application Form, and submit proof of purchase together with a failure description. Once the defect is confirmed as covered, repair or replacement will be arranged.

Limitation of Liability: In no event shall the Company's aggregate liability for product defects exceed the purchase price of the affected batch. The Company shall not be liable for indirect, incidental, or consequential damages (including, without limitation, production downtime, loss of profit, data loss, or third-party claims), equipment damage, personal injury, or any consequence arising from non-compliant use.

5. Product Change Notification

The Company reserves the right to modify the product design, materials, manufacturing process, parameters, dimensions, and documentation version without prior notice.

For major changes that affect critical performance, package interchangeability, or assembly compatibility, the Company will make reasonable efforts to notify existing customers in advance through the assigned sales representative, official document releases, or written communication such as email.

Users must rely on the latest officially released version as the basis for design and acceptance. The Company disclaims responsibility for any consequence of using outdated or unauthorized document versions.

HBGK

Wuxi Haobang High-Tech Co.,Ltd

Add: No.1, Huyang Road, Hudai, Binhu District,Wuxi, Jiangsu, China
Postcode: 214161
Customer service: 0086-510-85120111 or 85120222
PCBA BU (ext): 2280
IC BU (ext): 2280
Sensor BU (ext): 2219
Sales Dept. (direct): 18121541720
Fax: 0510-85122180
Email: salesteam@hbgk-global.com
Web: www.hbgk-sensor.com