HBP5003D-2 Series Press Sensors

Product Features



- Gauge pressure range: -100kPa to +200kPa optional, differential pressure
- Supply voltage: 1.8V ~ 5.5V optional
- Full digital temperature and pressure compensation, I2C output interface
- Apply for SOP16 package of SMD components, barb dual nozzle
- Compliant with RoHS and REACH standards

Typical Applications

- **Industry:** HVAC, Filtration testing; Safety cabinet; Liquid level detection; Pressure conversion, Pressure switch, Fire protection, Exhaust hood, Fire safety, Variable air Volume control, Fan, Environmental control measurement system, Gas flow, Airflow detection
- **Medical:** Spirometer, Sleep apnea monitor, Hospital bed, Ventilator, CPAP, Negative pressure wound treatment equipment
- **Consumer:** Sports and fitness equipment

General Description

The HBP5003D product series is a digital dual nozzle differential pressure sensor from Haobang High-Tech. The product has high precision, low power consumption, wide operating temperature range and has both pressure and temperature measurement functions. Each product is calibrated individually, and product offset, sensitivity, temperature drift and nonlinear compensation can be calibrated using calibration coefficients.

HBP5003D series adopts the standard SOP16 dual nozzle package, small size, compact structure and easy to use and system integration. The product has the characteristics of excellent ESD robustness, fast response, high precision, high linearity and long-term stability. All measurement data are fully calibrated and temperature compensated. The product is widely used in medical devices, HVAC, fire safety and sports equipment. Figure 1 is the schematic diagram of the product.

© 2026 Wuxi Haobang High-Tech Co., Ltd. All rights reserved

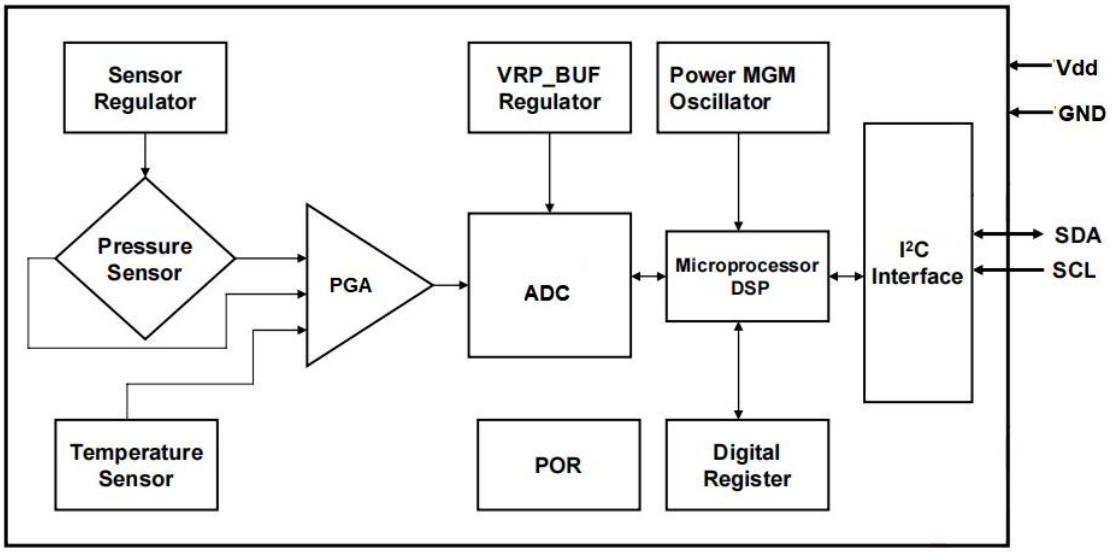

Figure 1：Schematic diagram of HBP5003D series

Absolute maximum Ratings*

Table 1：Absolute maximum rating of HBP5003D series

Parameter	Condition	Min.	Typ.	Max.	Units
Supply Voltage		-0.3		6.5	V
Voltage at Digital IO Pins	25°C	-0.3		Vdd+0.3	V
Overload pressure			2 times		Rated pressure
Burst pressure			3 times		Rated pressure
ESD	HBM		±2		kV
Storage temperature		-40		125	°C
Medium	Non-corrosive dry gases				

***Notes:** Stresses above those listed as 'absolute maximum ratings' may cause permanent damage to the device. This is a stress rating only and functional operation of the device under these conditions is not implied. Exposure to maximum rating conditions for extended periods may affect the reliability of products.

© 2026 Wuxi Haobang High-Tech Co., Ltd. All rights reserved

Product Specifications

Table 2: Performance of HBP5003D series

Parameter	Min.	Typ.	Max.	Unit.	Note
Supply voltage	1.8	5.0	5.5	V	Optional
Supply current		0.3		mA	
Measurement range	-100		200	kPa	Optional
Accuracy		±1		%FS	
Response time		1		ms	
Pressure output resolution		24		Bit	
Operating temperature	-40	0-60	85	°C	Optional,default typical values
Compensation temperature	0	0-60	80	°C	Optional,default typical values
Temperature data resolution		16		Bit	
Clock-pulse frequency			400	kHz	I2C communication

Please note: Unless otherwise stated, the data in the above table are tested under the following conditions: The measurement medium is air; Atmospheric pressure (101325±500) Pa; Temperature (25±2)°C; vibration 0.1g(1m/s2); Humidity (50%±10%) is RH; The voltage is (5.0±0.25)V DC.

I²C Communication Protocol

The I2C bus uses SCL and SDA as signal wires, both of which are connected to the Vddio by pull-up resistors (typical 4.7KΩ), which keeps the idle state high. Bits A7 to A1 form the address of the slave, bits W/R are the data transmission direction bits, 0 indicates that the master writes data to the slave, 1 indicates that the master reads data from the slave, as shown in Table 3.

© 2026 Wuxi Haobang High-Tech Co., Ltd. All rights reserved

Table 3: I²C address

A7	A6	A5	A4	A3	A2	A1	W/R
1	1	0	1	1	0	1	0/1

Table 4: Internal register information

地址	描述	读写	Bit7	Bit6	Bit5	Bit4	Bit3	Bit2	Bit1	Bit0	默认值
0x00	SPI_ Ctrl	RW	SDO_ active	LSB_ first	Soft reset			Soft reset	LSB_ first	SDO_ active	0x00
0x01	Part_ID	R				PartID<7:0>			0x00		
0x02	Status	R		Eror_code<5:0>		1'b0		DRDY		0x00	
0x06	DATA_MSB	R				Data out<23:16>			0x00		
0x07	DATA_CSB	R				Data out<15:8>			0x00		
0x08	DATA_LSB	R				Data out<7:0>			0x00		
0x09	TEMP_MSB	R				Temp out<15:8>			0x00		
0x0A	TEMP_LSB	R				Temp out<7:0>			0x00		
0x30	CMD	RW		Sleep_time<3:0>		Sco		Measurement_ctrl<2:0>		0x00	
0x6C	OTP_CMD	RW		Blow start<6:0>			margin			0x00	

Read data in the following order:

1. First, the binary value of 0xa5 is read as "x", the "x" is calculated with 11111101, and then written to the 0xa5 register
2. Send command 0x0A to 0x30 registers for one temperature acquisition and one pressure data acquisition
3. Read the address of register 0x30, if the Sco bit is 0, the data can be read, or wait for a delay of 10ms (10ms is suitable for OSR_P range of 256X~4096X).
4. Read the address data of 0x06, 0x07, 0x08 registers to form a 24-bit AD value (pressure data AD value)
5. Perform the following operations on the 24-bit AD value read to calculate the final pressure output:

   OUT(Pa)=AD/2^23*Full scale. Note the value of full scale:

   E.g.: When the full-scale pressure is 600000Pa, 2^19<600000<2^20, in 24-bit AD, at least 20 bits are needed to represent, that is, take 2^20 on the Full scale at this time.

© 2026 Wuxi Haobang High-Tech Co., Ltd. All rights reserved

The internal register of the circuit is referred to in Table 4 above.

There are 24 bits of pressure output value in the REG0x06, REG0x07 and REG0x08 registers, of which the highest bit is the sign bit, the sign bit value is 'negative' when it is '1', and the sign bit value is 'positive' when it is '0'. The temperature output value in the REG0x09 and REG0x0A registers is a total of 16 bits, of which the highest bit is the sign bit, the sign bit value is '1' represents 'negative', and the sign bit value is '0' represents 'positive'. The I²C communication timing values are shown in Table 5.

For example, assume that the decimal values read by REG0x06, REG0x07, REG0x08, REG0x09, and REG0x0A are x, y, z, a, and b.

Pressure cal_AD value: m=x*2^16+y*2^8+z

Positive and negative processing: if m>2^23, it is a negative value, pressure value=(m-2^24)/2^23*Full scale (Pa)

If m<2^23, it is a positive value, pressure value=m/2^23*Full scale (Pa)

Temperature value: n=a*2^8+b

Positive and negative processing: if n>2^15, it is a negative value, temperature value=(n-2^16)/256 (°C)

If n<2^15, it is a positive value, Temperature value=n/256(°C)。

Table 5：I²C communication timing value

Symbol	Parameter	Min.	Max.	Unit
f_{scl}	Clock frequency		400	kHz
t_{LOW}	SCL low pulse	1.3		μs
t_{HIGH}	SCL high pulse	0.6		μs
t_{SUDAT}	SDA setup time	0.1		μs
t_{HDDAT}	SDA hold time	0		μs
t_{SUSTA}	Setup Time for a repeated start condition	0.6		μs
t_{HDSTA}	Hold time for a start condition	0.6		μs

© 2026 Wuxi Haobang High-Tech Co., Ltd. All rights reserved

t_{SUSTO}	Setup Time for a stop condition	0.6		μs
t_{BUF}	Time before a new transmission can start	1.3		μs

I²C Timing Sequence

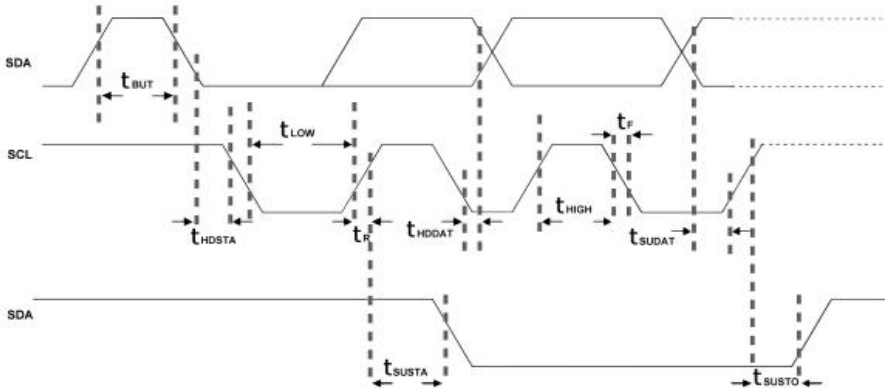

Figure 2: Reference circuit I²C timing diagram

Figure 2 is a timing diagram of the reference circuit I2C. After the slave device replies, the master device continues to send the 8-bit register address and continues to send or read data after receiving the reply. The SCL is at a high level, and a rising edge action occurs in SDA to signal the end of I2C communication. In addition to the start and end flags, the data transmitted by the SDA must remain stable when the SCL is high. The value of the SDA transmission can be changed when the SCL is low. All data transmission in I2C communication is based on 8 bits, and a response signal is required after every 8 bits of data transmission to keep the transmission going.

I²C Protocol

In the Start(S) condition, SCL is high, and SDA changes from high level to low level, representing start. In the Stop(P) condition, when SCL is still high, SDA changes from low level to high level, representing stop. Both the start signal and the end signal are sent by the master. After the start signal is generated, the bus is in the occupied state, and after the end signal is generated, the bus is in the idle state, as shown in Figure 3.

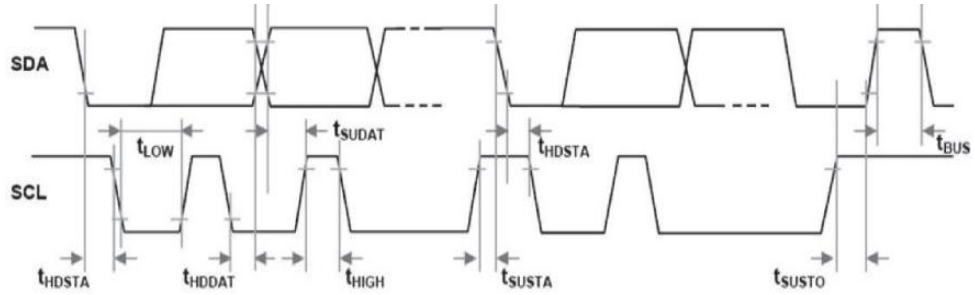

Figure 3: Reference circuit I²C protocol data transmission timing diagram

© 2026 Wuxi Haobang High-Tech Co., Ltd. All rights reserved

Reference circuit

The reference circuit of HBP5003D product series is shown in Figure 4.

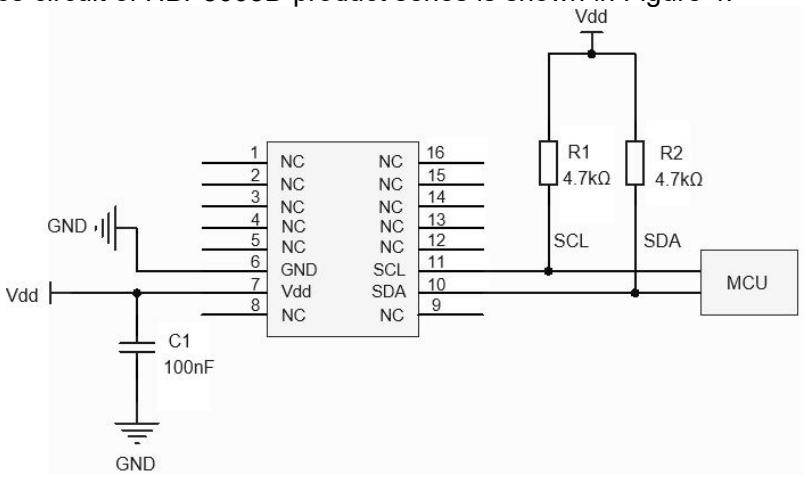

Figure 4: Reference circuit

Package Dimensions

The product dimensions of HBP5003D are shown in Figure 5, where all dimensions are in millimeters (mm) and the unmarked tolerance is ±0.1mm.

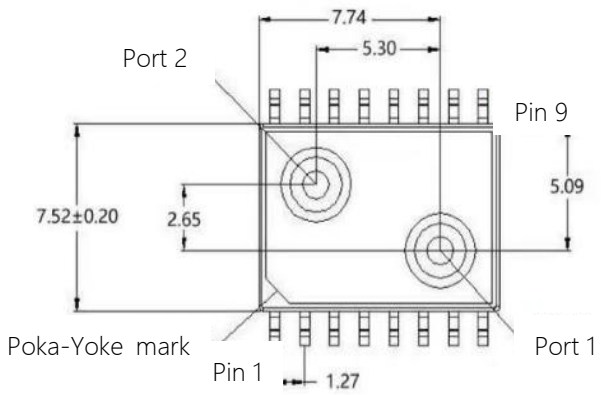

(a) Top view

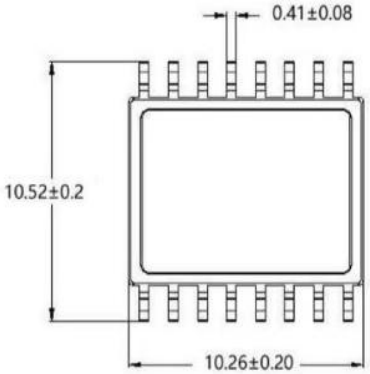

(b) Bottom view

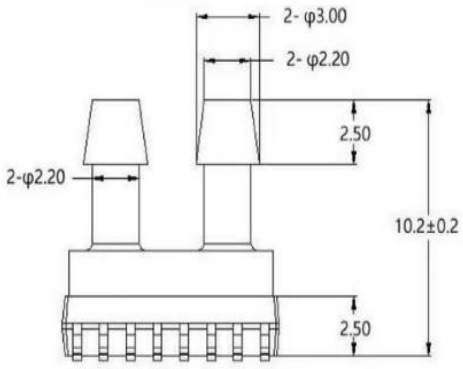

(c) Front view

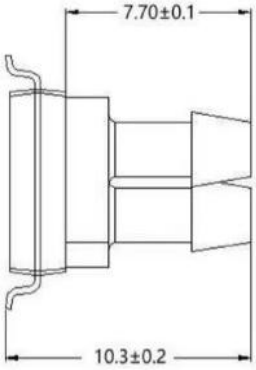

(d) Side view

Figure 5: Product dimension

© 2026 Wuxi Haobang High-Tech Co., Ltd. All rights reserved

Pin Definition and Function Description

The package size of the HBP5003D product series is shown in Figure 6, and the corresponding pin function description is shown in Table 6.

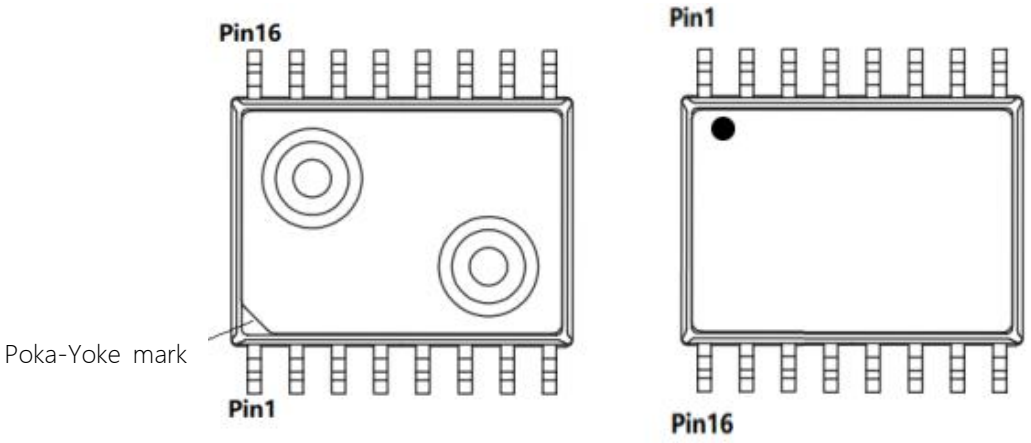

(a) Top view (b) Bottom view

Figure 6: Pin definitions

Table 6: Pin function description

No.	6	7	10	11	1, 2, 3, 4, 5, 8, 9, 12, 13, 14, 15, 16
Symbol	GND	Vdd	SDA	SCL	NC
Definition	Ground	Power supply	Data signal	Clock signal	Not connected

Note:

1) Do not connect any electrical signal to the N/C PIN, otherwise it may cause partial function failure.
2) Do ESD protection during soldering.
3) Overload voltage (6.5VDC) may burn the circuit chip, please add 0.1uf capacitor between Vdd and DND.
4) This product has no reverse protection, please pay attention to the power polarity when assembling.

© 2026 Wuxi Haobang High-Tech Co., Ltd. All rights reserved

Recommended Reflow Curve

The reflow curve of HBP5003D product series is shown in Figure 7, and the description of relevant parameters of reflow process is shown in Table 7.

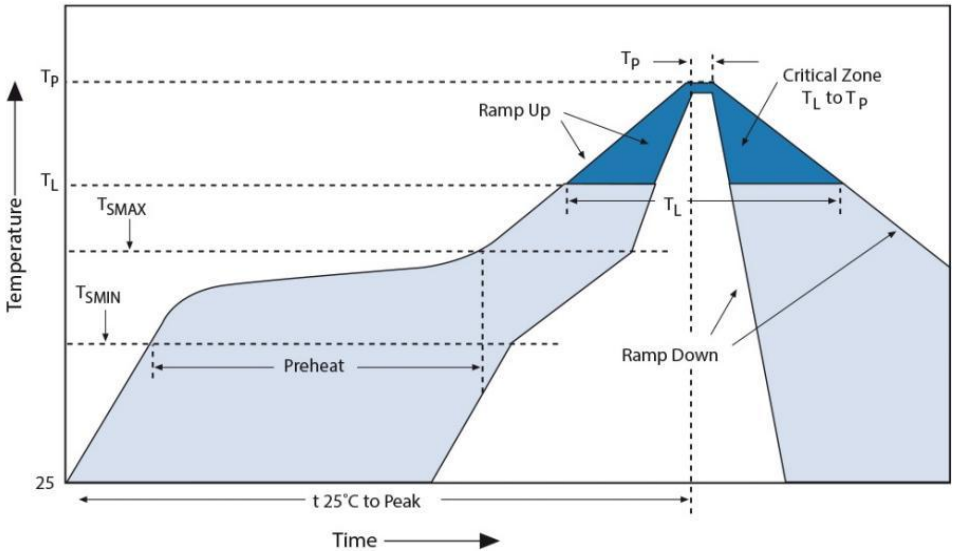

Figure 7: Reflow curve

Table 7: Reflow parameters description

Curve Feature	Lead free
Mean heating rate (T_{SMAX} to T_P)	3°C/s the fastest
Min temperature of preheating area(T_{SMIN})	150°C
Max temperature of preheating area(T_{SMAX})	200°C
TSMIN to TSMAX (t_S)	60~180 s
Reflux zone temperature (T_L)	217°C
Reflux zone time (t_L)	60~150s
Peak temp. (T_P)	260°C
Peak temp.+/-5°Ckeeping time(t_P)	20~40 s
Drop speed (T_P to T_{SMAX})	6°C/s the fastest
Time from 25°C to peak temperature	Max 8 min

© 2026 Wuxi Haobang High-Tech Co., Ltd. All rights reserved

Notes:

1) It is not allowed to fall into dust on sensor chip to avoid any damage on the product.
2) Do not allow to clean the circuit board after reflow welding, because the line general cleaning agent or detergent may damage the product. Do not expose the product to ultrasonic handling or cleaning.
3) It is recommended that the reflow welding times not exceed 3 times.

Products Selection Information*

The selection information of HBP5003D product series is shown in Figure 8.

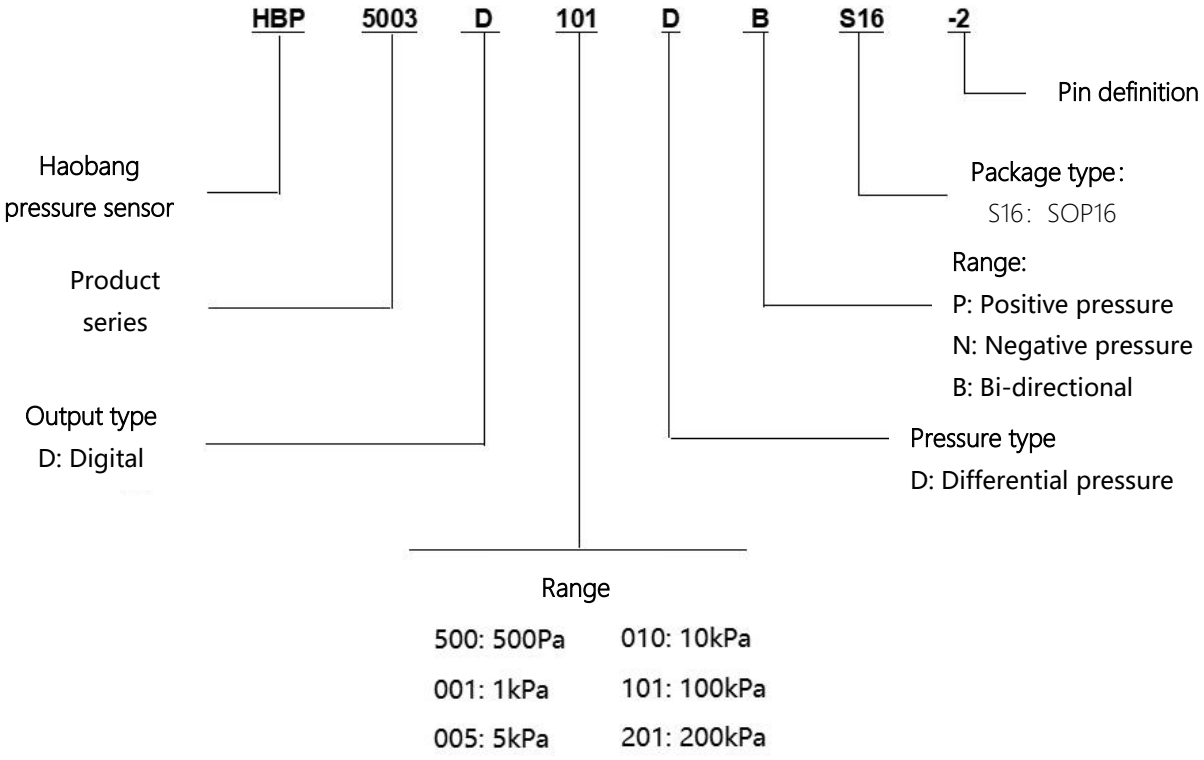

Figure 8: Schematic of Product Naming Rules

***Note:**

1) Some products do not contain all the ranges described above. For more product information, please contact info@haobang-smt.com.
2) Pressure conversion: 10kPa=100hPa=100mBar≈75mmHg≈1020mmH2O≈1.45PSI

© 2026 Wuxi Haobang High-Tech Co., Ltd. All rights reserved

Figure 8: Regular range list

Range (kPa)	Model
-0.5~+0.5	HBP5003D500DBS16-2
-1~+1	HBP5003D001DBS16-2
-5~+5	HBP5003D005DBS16-2
-10~+10	HBP5003D010DBS16-2
-100~+100	HBP5003D101DBS16-2
-100~+200	HBP5003D201DBS16-2

Customized services

Haobang is oriented to customer needs, providing customers with flexible customization solutions to meet different needs. The effective customization services include but not limited to the most cost-effective sensor chips and modules with different ranges, packaging sizes, and application ranges. For more information, please contact info@haobang-smt.com.

Document history

Table 9: Document history

Revision	Description	Date
1.0	Initial	2022 Jul
1.1	Add the pressure direction of product naming	2024 Jan

© 2026 Wuxi Haobang High-Tech Co., Ltd. All rights reserved